Data Sheet

Itemnumber....: 5542000100

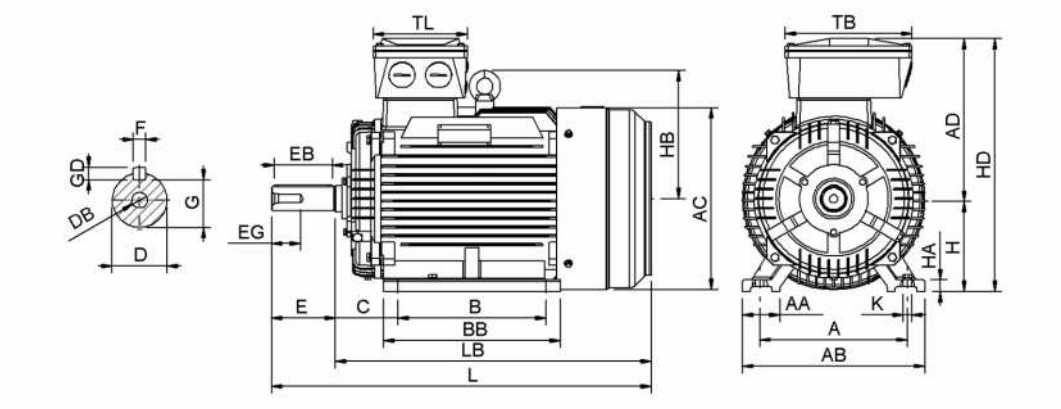

A = 318	**AC = 396**	**BB = 369**	**DB = M20**	**EG = 50**	**GD = 10**	**HB = 264**	**L = 769**	**TB = 260**
AA = 70	**AD = 313**	**C = 133**	**E = 110**	**F = 16**	**H = 200**	**HD = 513**	**LB = 659**	**TL = 192**
AB = 388	**B = 305**	**D = 55**	**EB = 100**	**G = 49**	**HA = 25**	**K = 4**	**LE = 737**	

Version
Type.....: HMC3 200L-4
Design.....: Induction motor
Standard series.....: IEC 60034
Phase / Voltage range.....: 3~ / Low

Electrical design
Efficiency.....: IE3
Pole.....: 4
Power at 50 Hz (kW).....: 30,0
Hz.....: 50
Voltage.....: 400VD/690VY
Winding voltage.....: 400VD/690VY 50 Hz
Power output (kW).....: 30,0
Duty.....: S1
Insulation class.....: F
Temperature rise.....: B

Motor protection
Thermal protection main....: PTC 3x 155 dgr
Thermal protection second..: None
Space heater.....: None
Temperature detector.....: No
SPM.....: No
IR wire.....: No
Tropical insulation.....: No

Explosion protection
According to.....: None
Type of protection.....: None

General
Direction of rotation.....: CW
Painting.....: RAL 9005 Gloss 10
Nameplate.....: Multivoltage
Special packing.....: No
Special requirements.....: No

Mechanical design
Frame size.....: 200
Mounting.....: B3
Rain cap.....: No
Protection class.....: IP55
Cooling method.....: IC411/TEFC
External grounding.....: Yes
Drain hole.....: Yes
Frame material.....: Cast Iron
Material approval.....: None
Shaft.....: IEC standard
Key.....: Closed key
Balancing.....: Half key balancing
Vibration class.....: Grade-A
Weight (kg).....: 275

Environment condition
Ambient temp. min. (°C)..: -20
Ambient temp. max. (°C)..: 40
Altitude (mtr up to).....: 1000

Bearing
DE Bearing.....: 6312/C3
NDE Bearing.....: 6312/C3
Fixed bearing.....: DE

Terminal box
Tbox position.....: Top
Cable entry direction.....: Right (from DE)
Cable entry
Main.....: 2 x M50x1,5
Metal blindcaps
Accessory.....: 2 x M20x1,5
Metal blindcaps
Connection type.....: Delta (D)
Terminal board thread.....: 6-M8

Test values
Rotor inertia (kgm²).....: 0,41
Noise level (dB(A)).....: 61
No load current (A).....: 20,2
Winding resist. (ohm).....: 0,19
Starting time (sec.).....: 0,13
Temp. rise winding (K).....: 57
Temp. rise surface (K).....: 37

Rated power (kW) .....:	30,0	29,0	36,0	35,0
Frequency (Hz) .....:	50	50	60	60
Voltage (V) .....:	400 690	380 660	480 830	440
Connection .....:	D Y	D Y	D Y	D
Full load current (A) ...:	54,0 31,0	55,5 32,0	54,0 31,0	55,5
Speed (rpm) .....:	1480	1480	1760	1760
Power factor cos(phi) ...:	0,87	0,88	0,87	0,88
Efficiency, 100/75/50 (%) :	93,6/93,8/93,0	93,6/93,8/93,0	93,6/93,8/93,0	93,2/93,3/92,5
Ist/In .....:	8,2	7,2	8,2	7,6
Full load torque (Nm) ...:	194	188	194	188
Tst/Tn .....:	2,9	2,7	2,9	2,5
Tmax /Tn .....:	3,3	3	3,3	2,8
Duty .....:	S1	S1	S1	S1
Ambient temp. (°C) .....:	40	45	40	45

Data are not binding. Hoyer reserves the right to implement changes without notice. The extent of data are not equivalent to nameplate on the motors.